BEHAVIOR OF LOAD DISTRIBUTION OF SINGLE PILE AND GROUP PILE

by
Shaw-Wei Duann, Rei-Fung Wang
Tsung-Chung Kao and Gwo-Jenn Liou

Reprinted from 3rd International Conference on Deep Foundation Practice incorporating Piletalk
19-20 May, 1994
Singapore

Behavior of Load Distribution of Single Pile and Group Pile

Shaw-Wei Duann, Project Manager, Geotechnical Engineering Dept. I, Moh & Associates, Inc., R.O.C.
Rei-Fung Wang, Head of Civil Division, Taiwan Power Company, R.O.C.
Tsung-Chung Kao, Vice President, Moh & Associates, Inc., R.O.C.
Gwo-Jenn Liou, Geotechnical Engineer, Geotechnical Engineering Dept. I, Moh & Associates, Inc., R.O.C.

ABSTRACT

Three reinforced concrete chimneys, 250m in height, were constructed to serve six generator units of a fossil-fuel power plant on the seashore of Taichung, Taiwan. They are founded on individual ring-shape reinforced concrete pile caps which are in turn supported on closed-end steel pipe piles.

All the piles are 48m in length and 80 cm in diameter. They were considered to be friction piles because calculations indicated that shaft friction would constitute the majority of the bearing capacities of the pile foundations. This design concept was confirmed by loading tests in which six piles were loaded to twice of their design loads and very little end bearing was observed in all the six cases. However, subsequent monitoring during the construction of the chimneys revealed that the end bearing of the piles increased drastically, obviously, as a result of group effects and surpressed friction as the predominant components of resistances.

This paper presents the results of loading tests and the findings obtained from the long-term monitoring of loads in the six test piles. The load-transfer mechanism is also discussed.

1.0 INTRODUCTION

In order to increase supply to meet the demand on electricity, a fossil power plant is being built on the seashore of Taichung, Taiwan. Upon completion, it will accommodate eight 550-megawatt generator units. There are a total of four chimneys, each serving two generator units, of 250m in height in the plant. Currently three of them have been completed and the fourth is scheduled to be completed in 1994. All these chimneys are founded on ring-shape pile caps which are in turn supported on closed-end steel pipe piles.

Six pile loading tests have been conducted and the results are discussed herein. Also discussed are the load distributions in piles during the construction of the chimneys.

2.0 FOUNDATION SYSTEMS

Chimneys No. 1 and 2 rest on separated pile caps with an outer diameter of 41.5m and an inner diameter of 24.5m. A schematic plan of the pile caps, together with the layout of piles, is given in Fig. 1. Each of the two pile caps is formed by three concentric reinforced concrete ring beams interconnected by tied beams. The ring beams are, as shown in Fig. 2, 5m in thickness and are supported on 88 piles. The foundation system for Chimney No. 3 is slightly different. Instead of 3 interconnected ring beams, a solid reinforced ring beam is used. The beam is 3.5m in thickness and is in turn supported on 126 piles. Figs. 3 and 4 show the schematic plan, together with the layout of piles, and the elevation, respectively. The outer diameter of the ring beam, in this case, is 34.4m and the inner diameter is 23.2m.

3.0 SUBSOIL PROPERTIES

The site was reclaimed in 1986 by hydraulic filling and the ground was raised, on an average, by 4.5m. Sand-pile compaction was conducted to improve the subsoils to depths of 16, 18 and 12m for 3 chimneys, respectively. The subsoils near surface, as revealed by drilling, consist of quaternary alluvium with a thickness exceeding 150m. A typical soil profile, showing the ground conditions at the locations of the three chimneys, is given in Fig. 5. As can be noted, above a depth of 50m, the soils are, primarily, interbedded silty sand, sandy silt and silty clay, with SPT N-values ranging from 10 to 20 blows/ft. Below this depth, sand dominates and the SPT N-values all exceed 20.

The groundwater table is now at depths of 3 to 5m below surface is found to be insensitive to tidal fluctuations. Within the top 40m, water pressures are hydrostatic. Between depths of 50 to 100m, water pressures are below hydrostatic pressures by, on an average, $5t/m^2$. This is believed to be due to drawing of groundwater by nearby fish farms.

4.0 MONITORING PROGRAM

Strain gauges (GEOKON VK4100: Vibrating Wire Type) were mounted on four piles, namely, TP1 and TP2 for Chimney No. 1 and TP3 and TP4 for Chimney No. 2, for studying the load distributions in piles. The locations of these test piles are shown in Fig. 1. The strain gauges were mounted in pairs on the inside surfaces of the pile walls at depths of 7m, 14m, 21m, 28m, 35m and 42m. All of them were seriously damaged during pile driving and had to be replaced. For Chimney No. 3, TP5 and TP6, of which the locations are indicated in Fig. 3, were instrumented by using a different type of strain gauges (OYO HS-10: Electrical Resistance Type) mounted at depths of 6.5m, 14.5m, 22.5m, 30.5m, 38.5m, and 46.5m. At each depth, four gauges were equally spaced. Less than one-tenth of the gauges were damaged during driving .

In addition to strain gauges, settlement points and extensometers were used to monitor ground settlements and the settlements of piles, and concrete strain gauges and rebar strain gauges were buried in the pile caps to monitor the stresses induced. However, due to the limited space available, the results will not be discussed herein.

5.0 LOADING TESTS

Loading tests were conducted on these six instrumented piles to verify the design. For TP1 and TP3, the standard pile load testing procedures given in ASTM D1143-81 were followed. Piles were first loaded to their design load of 333 tons in four equal increments. The design load was maintained for 12 hours. The pile was then loaded to twice of the design load in four steps with equal load increments. The

final load was maintained for 48 hours before it was totally released in four steps.

For other test piles, the quick loading procedures given in the same code, i.e., ASTM D1143-81, were followed. The load increments were 25 tons for TP2 and TP4, and 30 tons for TP5 and TP6. In each step other than the final, the load was maintained for only 2.5 minutes. At the final step, the load was maintained for 5 minutes before it was totally released in four steps.

The results of the loading tests are presented in terms of load-depth curves in Figs. 6 to 11.

6.0 LOAD DISTRIBUTIONS DURING CONSTRUCTION

The chimneys were constructed in three stages, ie., a) pile driving, b) casting of pile caps, and c) constructing windshields and steel liners. The stresses in the six test piles were continuously monitored throughout these three stages. For each chimney, the pile cap was cast 3 to 6 months after all the pipes had been installed, it is therefore believed that the residual stresses induced in the piles would not be significant. The readings taken immediately before the casting of the pile caps were used as initial readings for computing the stresses in piles in the subsequent stages and the results are presented in Figs. 12 to 17.

7.0 COMPARISON OF PERFORMANCE OF SINGLE PILES AND GROUP PILES

The results of loading tests shown in Figs. 6 to 11 indicate that the test loads were fully resisted by shaft friction and the end bearing of the piles was negligible. This fact agrees well with the observations obtained by many researchers that end bearing contributes to, usually, 20%, or even less, of the capacities of long piles in loading tests because of insufficient movements at the pile tips for the end bearing to fully develop. Based on the load-settlement curves (not shown herein) obtained in the tests, the bearing capacity did not fully developed, and therefore piles shorter than 48m would have been adequate if settlement were not a concern. to 17. The dead weights of the pile cap and the chimney and the loads shared by each pile are as follows:

	Chimneys 1 and 2 (88 piles)	Chimney 3 (126 piles)
Pile Cap	8,900 tons	4,920 tons
Load/Pile	101 tons	39 tons
Chimney	13,800 tons	17,880 tons
Load/Pile	157 tons	142 tons
Total	22,700 tons	22,800 tons
Load/Pile	258 tons	181 tons

There is a fair agreement between these computed loads and the measured loads in the upper portion of piles if all the six piles are evaluated together.

Although the load profiles for the three chimneys are different in shape, there is a clear tendency for the end bearing to increase with the loads applied at the tops of piles. At the end of construction, the contributions of end bearing were 30% (for TP3, TP4 and TP6), 60% (for TP1), 80% (for TP2) and 100% (for TP5) of the theoretical loads. This is drastically different from what was observed during the loading tests in which the end bearing was found to be negligible even at the final loads which are twice of the design loads.

Since test piles were not loaded to failure, the ultimate shaft frictions of individual piles have to be estimated using the correlations established at nearby sites (Duann, Wang, and Wang, 1991) and sites with similar ground conditions (Yen, et al, 1989), and the results are shown in Table 1. As can be noted, the ultimate shaft frictions range from 910 tons/pile for Chimney No. 3 to 1130 tons/pile for Chimney No. 2. The shaft friction acting on each pile can be obtained by subtracting the end bearing from the load applied on the pile on each pile can be obtained by subtracting the end bearing from the load applied on the pile top, ie. the dead load. Assuming the end bearings measured by the strain gauges at the pile tips are reliable, the shaft frictions, refer to Figs. 12 to 17, would correspond to only 10 to 20% of their ultimate values computed by correlation with soil strengths.

The frictional resistance of piles as a group was also computed by considering the soils under the ring-beams to the depth of piles as a solid block. The total frictions on the outer faces of the cylinder alone, as shown in Table 1, range

from 383,000 for Chimney No. 3 to 677,000 tons for Chimney No. 2. Accordingly, the structural loads, correspond to 35% to 60% of the ultimate frictional resistance of the pile groups.

The frictional resistances of the pile groups were also computed by using the Converse-Labarre Equation (Moorhouse and Sheehan, 1968) and the results are given in the last column of Table 1. The ratio of the frictional resistance so computed to the sum of shaft friction of individual piles is called group efficiency. The group efficiency is 0.8 for Chimneys No. 1 and 2 and 0.6 for Chimney No. 3. The structural loads correspond to, roughly, 30% of the frictional resistances of the pile groups.

In summary, the structural loads correspond to less than 50% of the frictional resistance of the pile groups, and yet, monitoring indicates that the majority of the structural loads is taken by end bearing instead of friction.

Another interesting observation can be made from Figs. 12 to 17 is the fact that the load profiles bulge out at certain depths for all the six test piles. This phenomenon is quite the same as that of negative skin friction and a similar observation was reported in Endo, Kawashaki and Shibata, 1969. It is a result of complicated soil-pile-cap interaction effects and the mechanism deserves further studies.

8.0 CONCLUSIONS

Based on the results presented herein before, the following conclusions can be drawn:

a) The load distribution in piles in a group is drastically different from that in isolated single piles. Therefore, the performance of piles in a group can not be predicted based on pile load tests.

b) In the cases studied, the loads were fully taken by shaft friction during loading test, while the structural loads were predominantly taken by end bearing upon the completion of the construction.

9.0 ACKNOWLEDGMENTS

This paper was prepared based on the soil investigation, pile load tests, and monitoring during the construction of pile caps and windshields carried out by Moh and Associates, Inc. and commissioned by Taiwan Power company . Permission for publishing the results is gratefully acknowledged. The authors wish to express their appreciation to Drs. Za-Chieh Moh, Richard Nanhuei Hwang, Chung-Tien Chin, Kuo-Liang Pan and Manager Chieh-Hong Wang of Moh and Associates, Inc. and Dr. Fu-Shu Cheng of the Civil Engineering Department of National Taiwan University for providing their precious opinions, to Mr. Ming-Chuan Kuo for his help in carrying out all the computational work presented herein.

10.0 REFERENCES

Duann, S. W., Wang, R. F., and Wang, C. H. The Application of Electric Cone Penetrometer in Estimating Driven Pile Bearing Capacity- A Case History; Sino-Geotechnics, No. 36, PP. 7-19, Taipei, 1991 (in Chinese)

Yen, T. L., Lin, H., Chin, C. T., and Wang, R. F. Interpretation of Instrumented Driven Steel Pipe Piles, Proc. of the Congress, ASCE, Foundation Engineering: Current Principles and Practices, Vol. 2, pp. 1293-1308, 1989

Moorhouse, D. C. and Sheehan, J. V. Predicting Safe Capacity of Pile Groups; Civil Engineering, ASCE, Vol. 38, No. 10 Oct., 1968, pp. 44-48, 1968

Endo, M., Kawasaki, T., and Shibata, T. Negative Skin Friction Acting on Steel Pipe Pile in Clay; Proc. 7th International Conference on Soil Mechanics and Foundation Engineering, Vol. 2, pp. 85-92, Mexico, 1969

Table 1. Comparison of Skin Friction among Single Pile, Group Pile and the Dead Load

Chimney No.	Structural Dead Load (ton)	Ultimate Skin Friction for Single Pile × No. of Pile (Local Experience) (ton)	Skin Friction of Group Piles (ton)	
			Considering Group Piles as a Cylindrical Block	By Converse-Labarre Equation
1	22700	950×88 = 83600	44500	66900
2	22700	1130×88 = 99440	67700	79500
3	22800	910×126 =114660	38300	71600

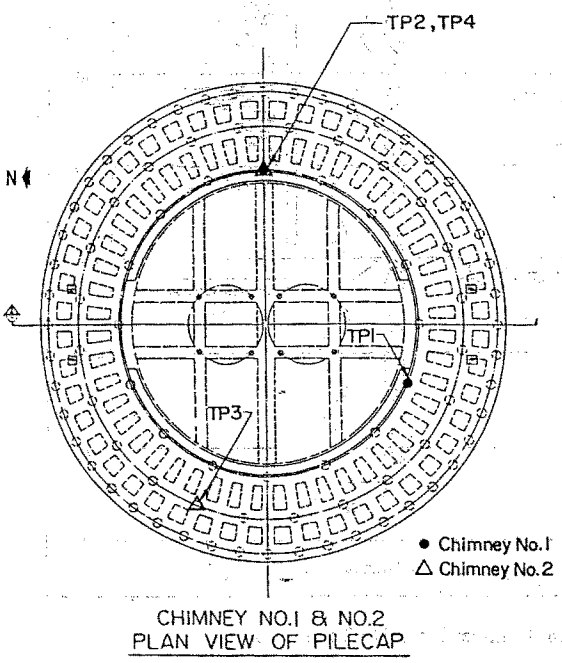

Figure 1. Plan View of Pile Cap for Chimney No.1 and No.2

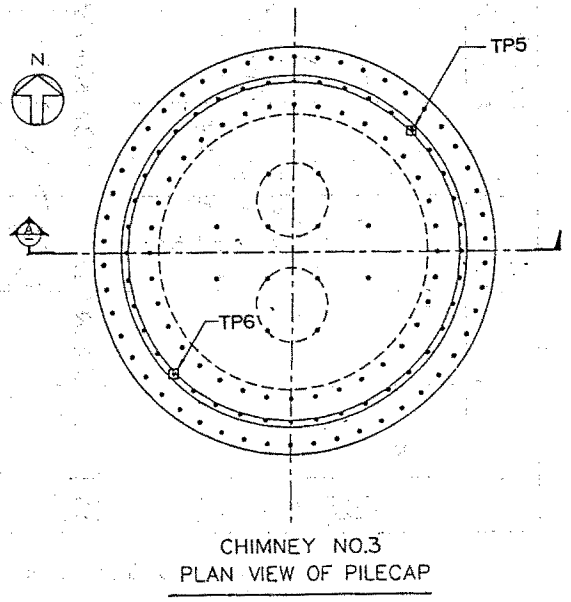

Figure 3. Plan View of Pile Cap for Chimney No.3

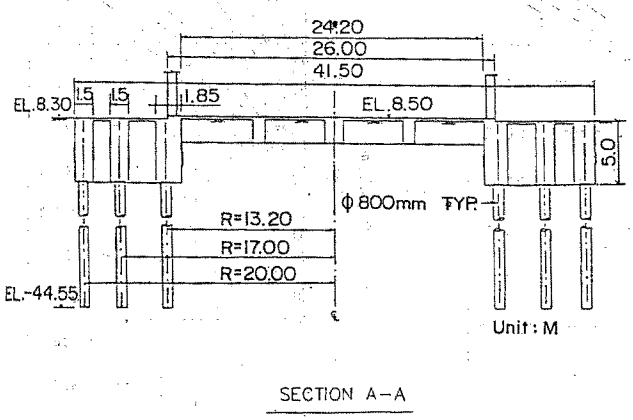

Figure 2. Elevation View of Pile Cap for Chimney No.1 and No.2

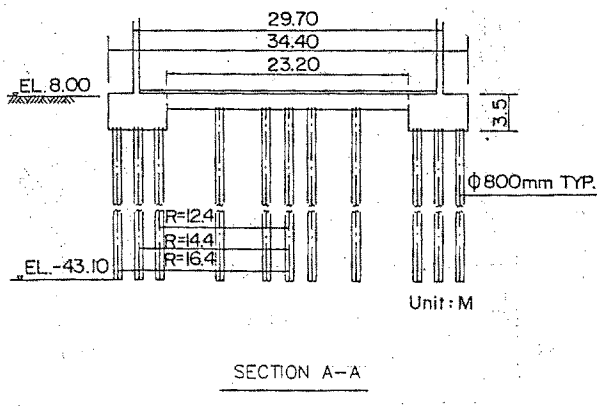

Figure 4. Elevation View of Pile Cap for Chimney No.3

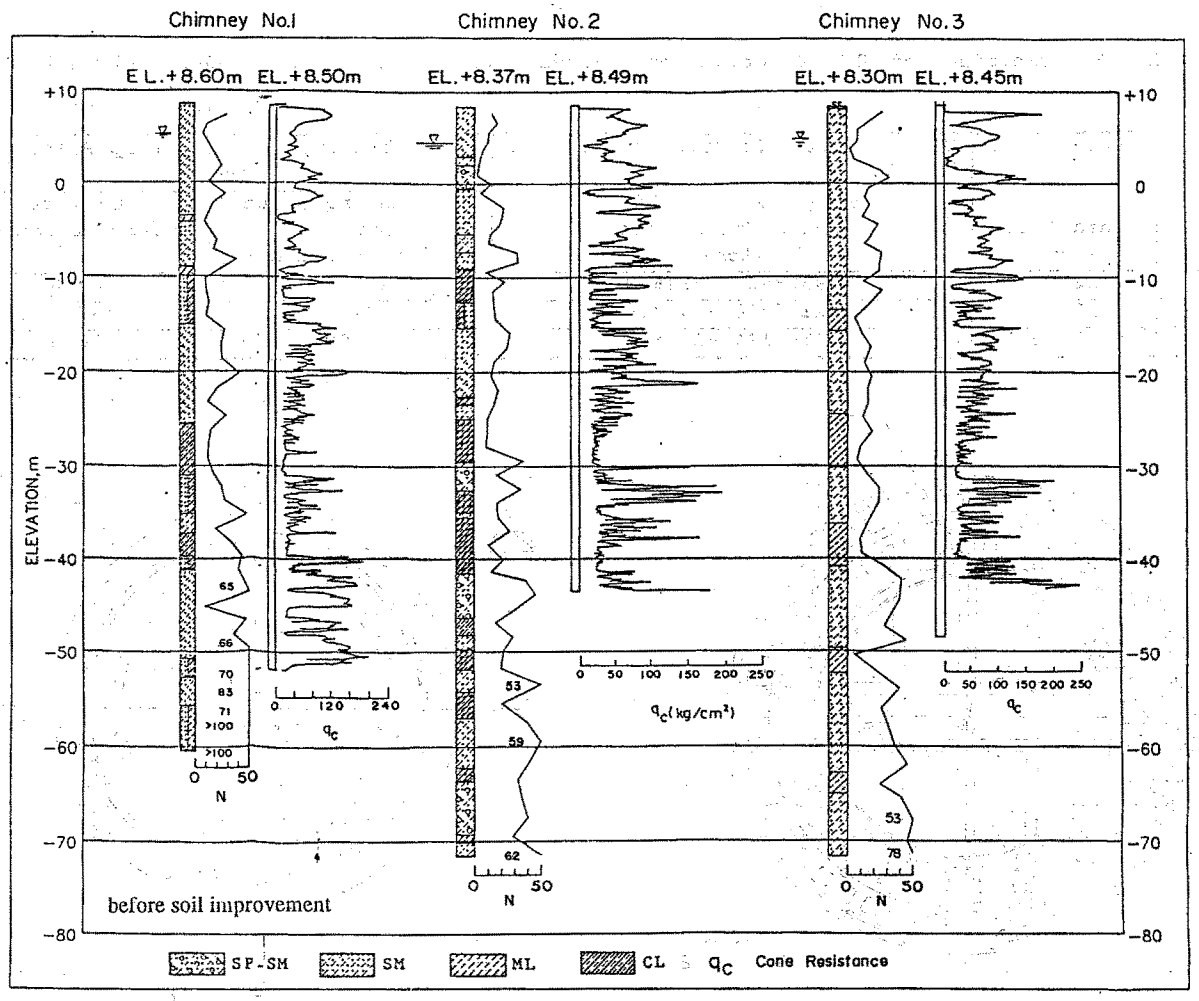

Figure 5. Subsoil Profile and CPT Results near Chimney No.1, No.2 and No.3

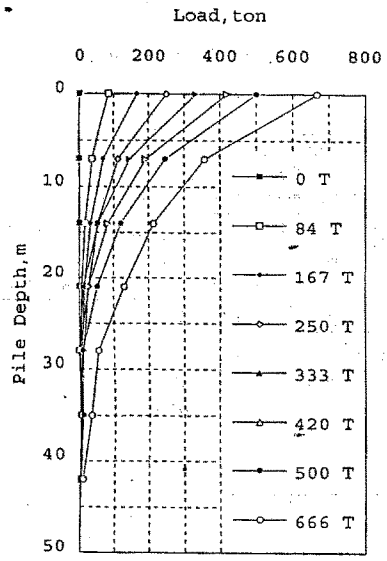

Figure 6. Load Vs Depth during Pile Load Test Chimney No.1, TP1

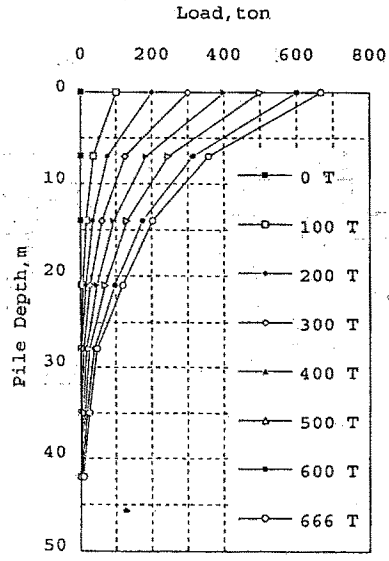

Figure 7. Load Vs Depth during Pile Load Test Chimney No.1, TP2

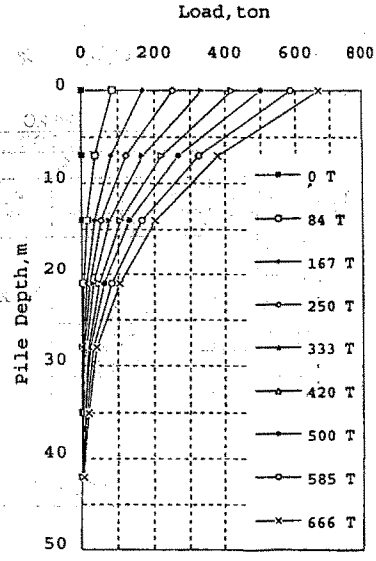

Figure 8. Load Vs Depth during Pile Load Test Chimney No.2, TP3

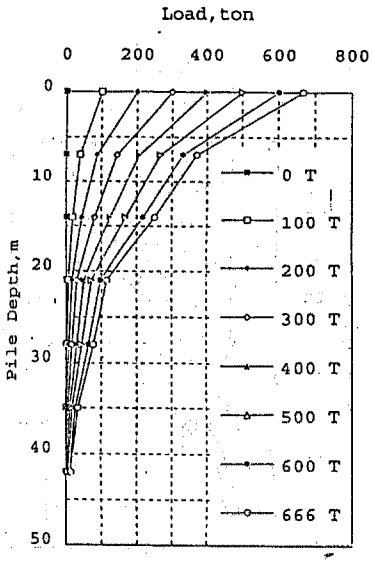

Figure 9. Load Vs Depth during Pile Load Test Chimney No.2, TP4

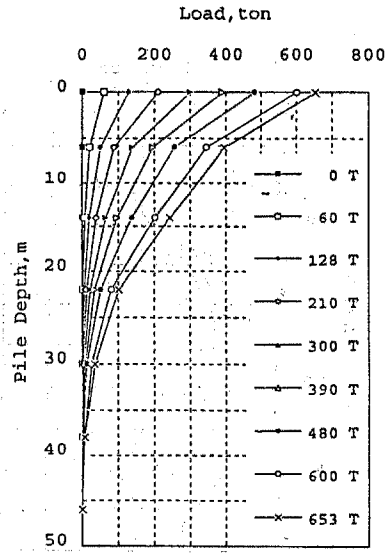

Figure 10. Load Vs Depth during Pile Load Test Chimney No.3, TP5

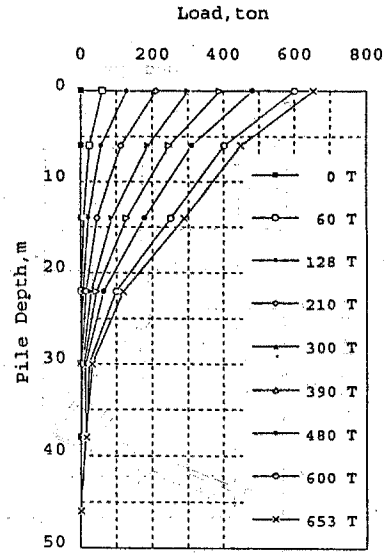

Figure 11. Load Vs Depth during Pile Load Test Chimney No.3, TP6

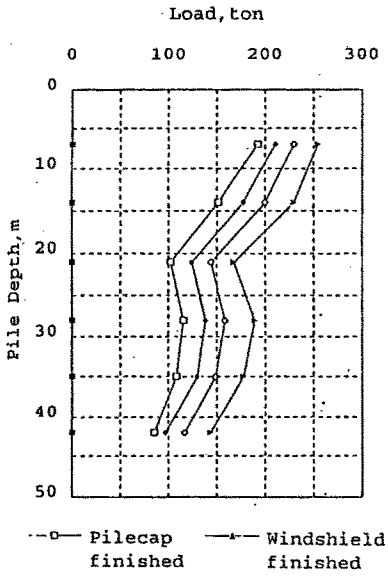

Figure 12. Load Vs Depth during Construction of Chimney No.1, TP1

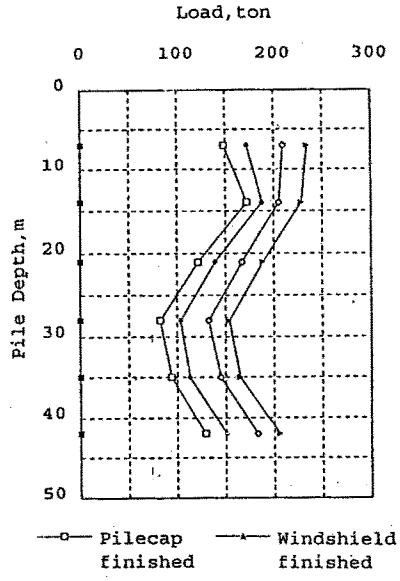

Figure 13. Load Vs Depth during Construction of Chimney No.1, TP2

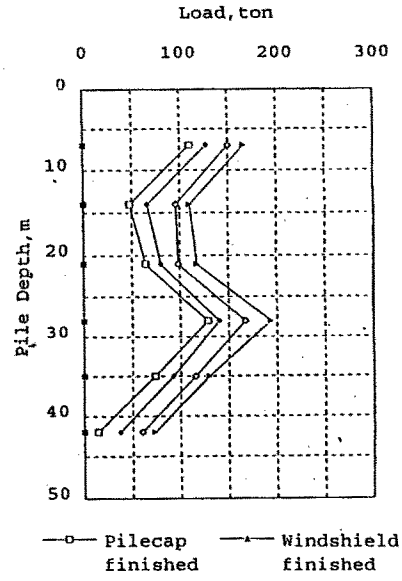

Figure 14. Load Vs Depth during Construction of Chimney No.2, TP3

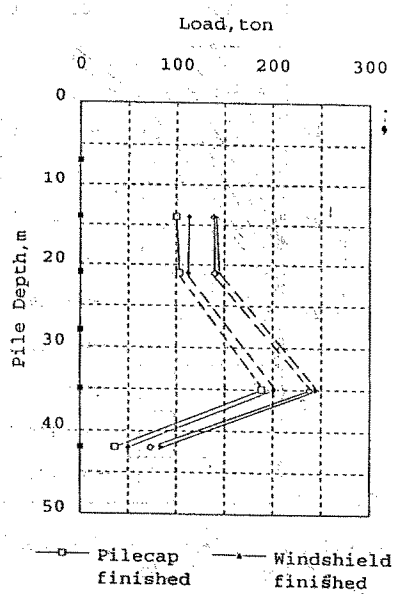

Figure 15. Load Vs Depth during Construction of Chimney No.2, TP4

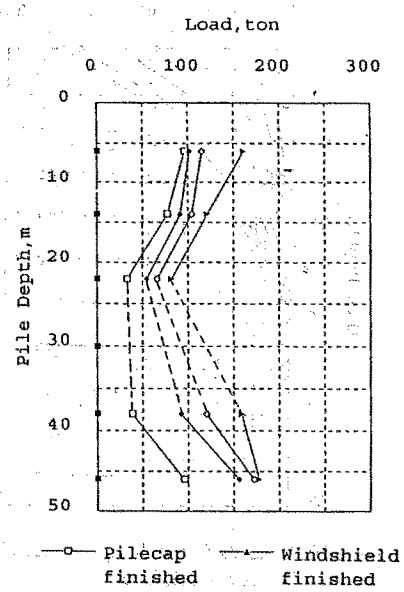

Figure 16. Load Vs Depth during Construction of Chimney No.3, TP5

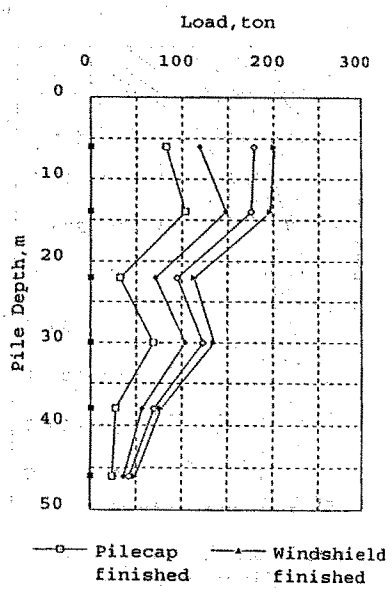

Figure 17. Load Vs Depth during Construction of Chimney No.3, TP6